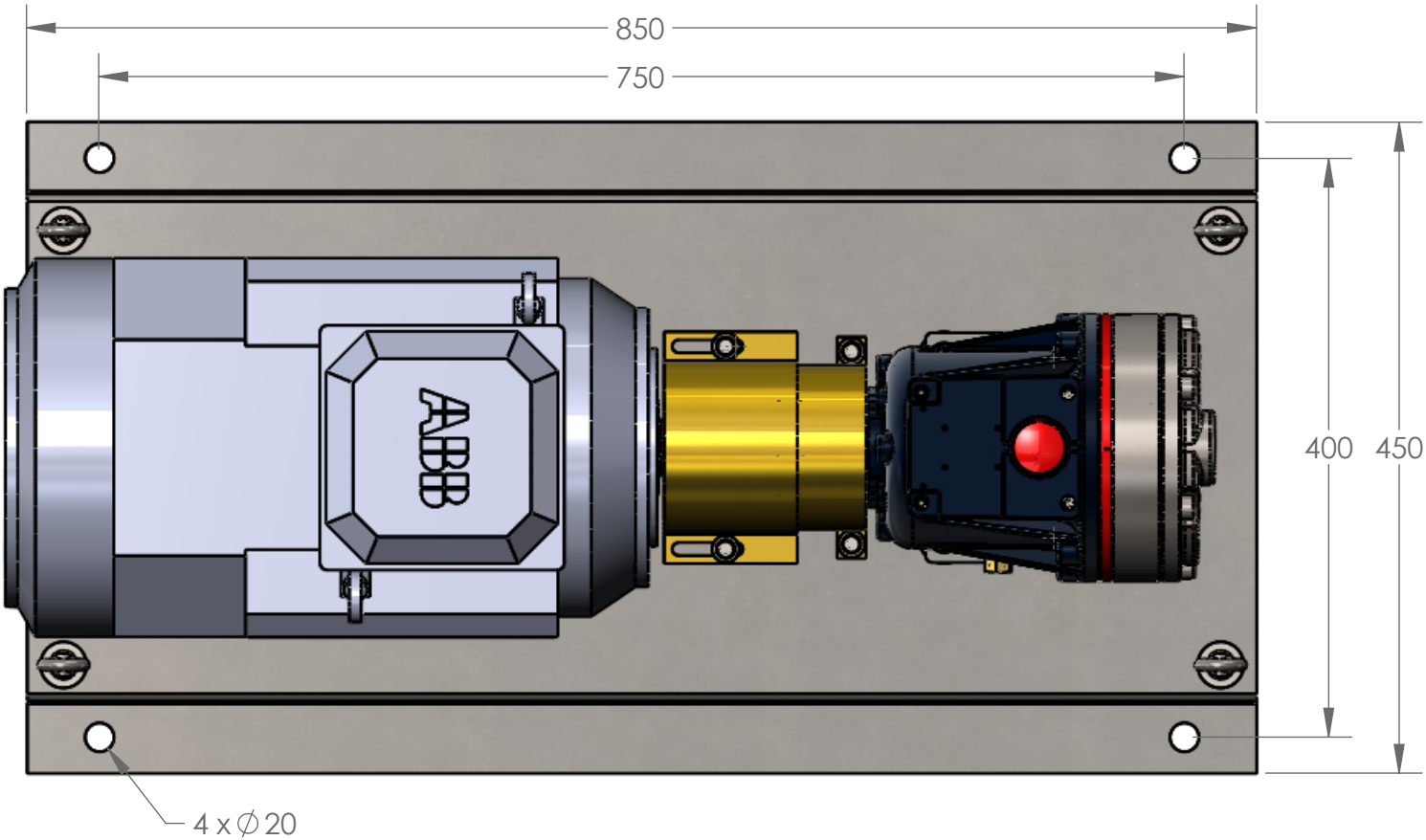

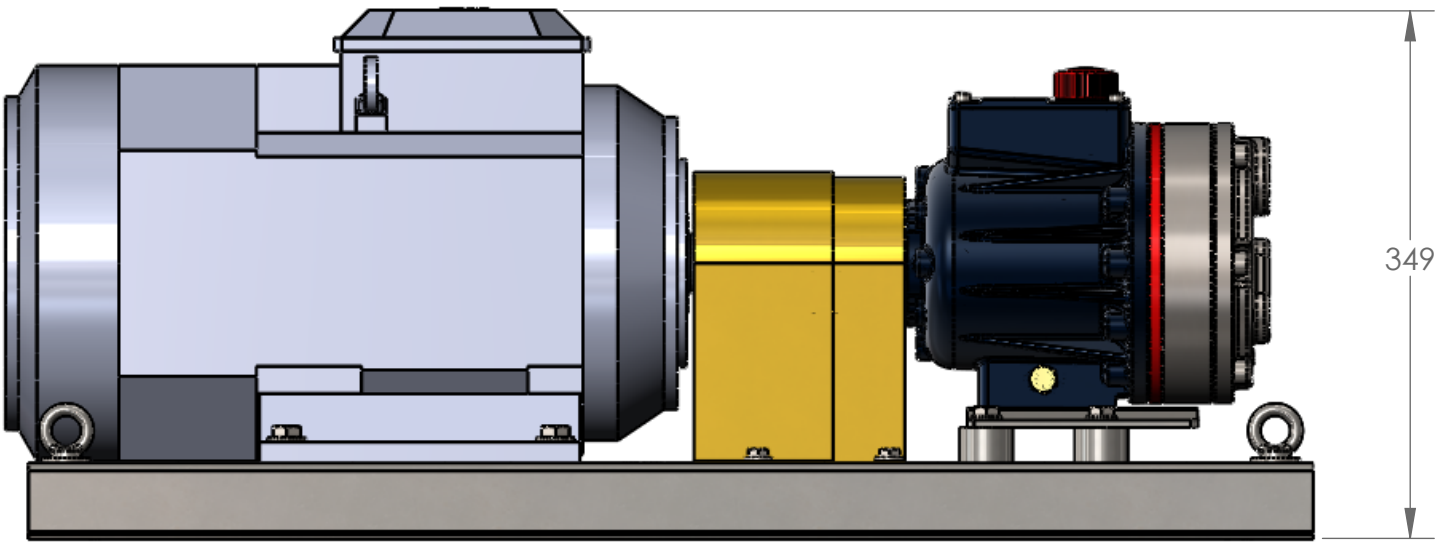

G10 - IEC 132 - LC **138 Kg**